Proceedings of the Third International Conference on Electronics Communication and Aerospace Technology [ICECA 2019]
IEEE Conference Record # 45616; IEEE Xplore ISBN: 978-1-7281-0167-5

Adaptive PID-Fuzzy Logic Controller for Brushless DC Motor

Vishal Verma (PG Scholar)
Department of Electrical Engineering
National Institute of Technology,Kurukshetra
Haryana
vishalrajpoot240@gmail.com

Sunita Chauhan
Department of Electrical Engineering
National Institute of Technology, Kurukshetra
Haryana
singh298@hotmail.com

***Abstract*— There is a increase in use of variable speed drives in all the fields like automobile, medicals and household that also increase the demand of brushless DC motors (BLDCM). As BLDC motor is superior over conventional DC motor in areas like higher efficiency,better speed–torque characteristics, noise reduction and low maintenance because there are no brushes to get wearout or produce sparking. Though most of the BLDC motors adopt PI controller and PWM scheme for the speed control of BLDCM. To make speed controlling more precise and robust an adaptive PID-fuzzy controller has been design. Dynamic changes in speed if required can be controller precisely.**

Keywords*— *Hall Effect Sensor, Trapezoidal back-EMF,* PID *Controller, Fuzzy logic controller.

I. INTRODUCTION

As BLDC motor name signifies it does not need any commutation using brushes unlike conventional DC motor instead it uses electronic commutation techniques. Hence It leads to various advantages like good efficiency, longer life, less noisy and negligible maintenance cost [1]. Brushless DC motor has overcome some absolute problem of DC motors that associate with mechanical friction. Permanent magnet motor can be subdivided in two ways first is named as permanent magnet brushless DC motor (PMBLDCM) and second is named as permanent magnet synchronous motor (PMSM).It was LUK P C K, Lee C K (1994) who have discussed that BLDC is different version of PMSM having same structure but only difference is that the back-EMF is trapezoidal in shape in case of PMBLDCM while its sinusoidal in case of PMSM. Hence it can be concluded that permanent magnet brushless DC motor is a polyphase synchronous motor having permanent magnet as a rotor. BLDC motor combines a solid state inverter, polyphase stator winding, permanent magnet rotor, and rotor position sensor. The running state of rotor of BLDCM is result of the feedback from the hall effect sensor and the control logic used to excite stator winding phases which are govern by gate signal of inverter switches which is control by control logic in inner loop circuit[2].

Controlling of BLDCM consist of two loops. Outer loop control the speed of the motor while the Inner loop control the current. Speed of BLDC motor is mainly controlled by PID controller as they are conventional and most easier to apply. But the noisy measurement produce by derivative part of PID controller has made PI controller [3] to come into the action for speed control applications. PI controller is popular because of its ease of tunning, robustness and simplicity. Nowadays, modern controlling techniques has come into the picture like neural network, fuzzy logic[4], adaptive controller.

From the late 20th century BLDC motor has gaining popularity in various field of application like automotives[5], robotics[6], aerospace[7], industrial process control and household[8] application.

The objective of this paper is to use mathematical model [2]of BLDCM to find out its transfer function[11]. Also an adaptive PID-fuzzy [9][10] controller has been proposed to control the speed of BLDCM more precisely also during dynamic variation in speed of motor controller works very effectively as motor soon attend the new varied speed.

II. TRANSFER FUNCTION OF PMBLDC MOTOR

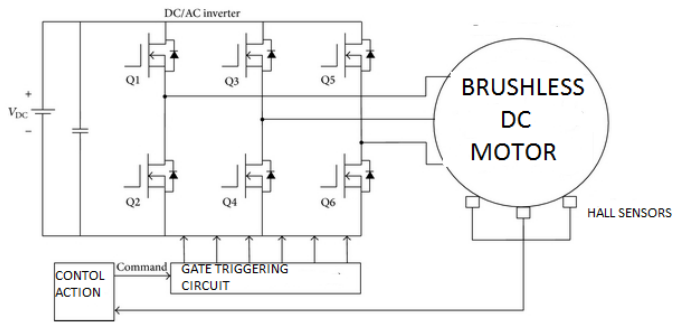

Fig.1 *Open loop control of BLDC motor*

From the mathematical modeling [2] of BLDC motor the phase voltage equation has been given as

$$\begin{bmatrix} V_A \\ V_B \\ V_C \end{bmatrix} = \begin{bmatrix} R & 0 & 0 \\ 0 & R & 0 \\ 0 & 0 & R \end{bmatrix} \begin{bmatrix} I_A \\ I_B \\ I_C \end{bmatrix} + \begin{bmatrix} L-M & 0 & 0 \\ 0 & L-M & 0 \\ 0 & 0 & L-M \end{bmatrix} \frac{d}{dx} \begin{bmatrix} I_A \\ I_B \\ I_C \end{bmatrix} + \begin{bmatrix} E_A \\ E_B \\ E_C \end{bmatrix} \quad \text{.... (1)}$$

Where R = phase resistance

I_X = phase current, x stands for phase A,B or C

L = per phase inductance of coil

M=per phase mutual inductance

E_X= back emf of each phase where x stands for phase

Electrical circuit of BLDC motor has shown in fig(2)

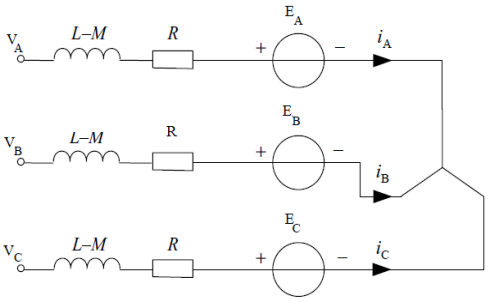

Fig. 2 *Equivalent circuit of BLDCM*

Since power transistor (inverter)is use for BLDC stator winding excitation hence instead of phase voltage ,line voltage will be more conventional as at one instant two windings are excited simultaneously leaving third one off. Line voltage equation will be given as

$$\begin{bmatrix} V_{AB} \\ V_{BC} \\ V_{CA} \end{bmatrix} = \begin{bmatrix} R & -R & 0 \\ 0 & R & -R \\ -R & 0 & R \end{bmatrix} \begin{bmatrix} I_A \\ I_B \\ I_C \end{bmatrix} + \begin{bmatrix} L-M & M-L & 0 \\ 0 & L-M & M-L \\ M-L & 0 & L-M \end{bmatrix} \frac{d}{dt} \begin{bmatrix} I_A \\ I_B \\ I_C \end{bmatrix} + \begin{bmatrix} E_A - E_B \\ E_B - E_C \\ E_C - E_A \end{bmatrix} \quad (2)$$

The motion equation will be expressed as

$$T_E - T_L = J\frac{d}{dt}\omega + \mathrm{B}\,\omega \qquad \text{….. (3)}$$

T_L= Load torque

T_E=Electromagnetic torque = K_TI ……. (4)

B= Viscous friction coefficient

K_T=Torque coefficient

I= steady state current

J= moment of inertia of rotor

ω =Angular velocity of rotation

Three phase BLDC motor need to be six time commutated[2]. Each phase of stator is excited by inverter output according to Hall Effect Sensor signals .At any instant of time only two phase are excited while the third one will be left idle. Considering three –phase BLDC motor which is excited by full-bridge inverter in two phase conduction mode, for the instant when phase A and B are conducted. Then,

I_A=I_B= -i

$\frac{dI_A}{dt} - \frac{dI_B}{dt} \frac{di}{dt}$

If back emf transient is ignored (trapezoidal bevel edge), then E_A and E_B will be equal in magnitude and exactly reverse in direction when phase A and B get excited. Hence from equation (2)

$$V_{AB}=V_d=2RI+2(L-M)\frac{di}{dt}+2E_A=r_a i+L_a\frac{di}{dt}+K_e\,\omega \quad \text{……(5)}$$

Considering no load system from equation (3) and (4)

$$i=\frac{J}{K_T}\frac{d\omega}{dt}+\frac{B}{K_T}\,\omega \qquad \text{……..(6)}$$

substituting eq.(6) in eq.(5) and rearranging,

$$V_d= L_a\frac{J}{K_T}\frac{d^2\omega}{dt^2}+\frac{r_aJ+L_aB}{K_T}\frac{d\omega}{dt}+\frac{r_aB+K_eK_T}{K_T}\,\omega \qquad \text{……..(7)}$$

laplace transform of eq.(7) is given as

$$G_V(s)=\frac{\omega(S)}{V_{d(S)}}=\frac{K_T}{L_a JS^2+(r_aJ+L_aB)S+(r_aB+K_eK_T)} \qquad \text{…….(8)}$$

From equation (8) the transfer model of BLDC motor control system with no load can be shown as

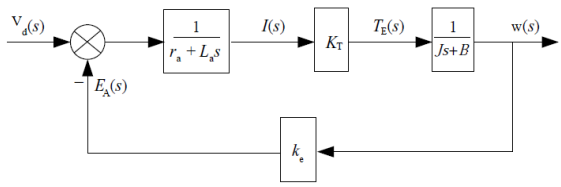

Fig.3 *Block structure of BLDCM control system with no load*

And with load it can be represented as

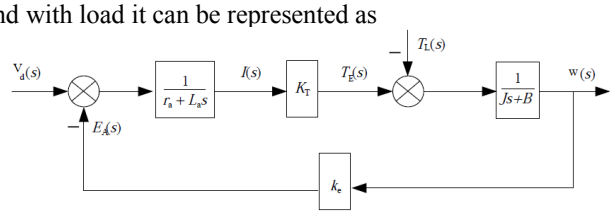

Fig.4 *Block structure of BLDCM control system with load*

From Fig. (4)

Transfer function between speed and load torque can be given as

$$G_L(s)=\frac{\omega(S)}{T_L(s)} = -\frac{r_a+L_a S}{L_a JS^2+(r_aJ+L_a B)S+(r_aB+K_eK_T)} \quad \text{…..(9)}$$

Therefore it can be concluded that speed of BLDC motor gets affected by both voltage as well as load torque and the speed response is given by

$$\omega(S) = G_V(s)V_d(\mathrm{s})+ G_L(s)V_d(s) \qquad \text{……..(10)}$$

$$\omega(S) = \frac{K_TV_d(\mathrm{s})}{L_a JS^2+(r_aJ+L_a B)S+(r_aB+K_eK_T)} - \frac{r_a+L_a S}{L_a JS^2+(r_aJ+L_a B)S+(r_aB+K_eK_T)} \qquad \text{……..(11)}$$

III. CONTROLLERS

Hall Effect Sensor Gives high or low output according to north pole position of rotor magnet but to energize stator windings according to rotor position a controller is needed and hence a proper control logic need to be design so that Hall Effect output can be use to give gate signal to inverter in proper sequence according to which stator winding energize and motor rotates.This controller controls the current through stator but to control speed one more feedback system is required .here used controllers are PID and Fuzzy logic controller.

1. PID Controller

PID controller is the conventional controller who manipulate error signal and gives output according to relation

$$y(t)= k_p e(t)+ k_i \int e(t)+k_d \frac{de(t)}{dt}$$

k_p is called proportional constant it accounts for present value of error, k_d is derivative constant, derivative mode account for future value of error signal by considering present rate of change of error.

k_i is integral constant, integral mode accounts for past value of error.

2. Fuzzy Logic Controller

MATLAB itself have a fuzzy logic Toolbox which can be directly use to design a fuzzy logic controller. A fuzzy logic controller consist of :

Fuzzification: process of transforming inputs also called as crisp values into the linquistic values is called fuzzification

Knowledge Base: It is a full collection of control rules which are needed to get the desired output.

Fuzzy Reasoning Mechanism: This is the processes which performs fuzzy operations and produce the output according to input and knowledge base.

Deffuzification: This is the dual of Fuzzification It transform the result of fuzzy reasoning mechanism again into the crisp value.

To use fuzzy logic toolbox firstly a fis. File has to be created.To created a fis. File and define membership function Mamdani rule structure is used. One output and Two inputs type fuzzy logic controller is used in which error(e) and variation in error ($\dot{e}$) are taken as input and controlled output as output(y).The fuzzy control rule are in the design of: IF e=A and $\dot{e}$ = B THEN y=C. Membership function has been shown in fig(5).Seven linquistic variables classified as NB,PB,NM,PM,NS,PS,Z. in the range of (-3,3)all inputs and output are defined in above range only. Gaussian membership function has been used in designing of fuzzy logic controller.The linquist label has been described as Negative Big(NB), Positive Big(PB), Negative Medium(NM), Positive Medium(PM), Negative Small(NS), Zero(Z), Positive Small(PS). The set of rules used to get controlled output are assigned as TABLE 1.Therefore, 49 set of rules has been assing using these rules a fis file is created that will be further attached to the fuzzy tool box. The simulink model of speed control of brushless DC motor using fuzzy logic controller has been shown in Fig. 6.

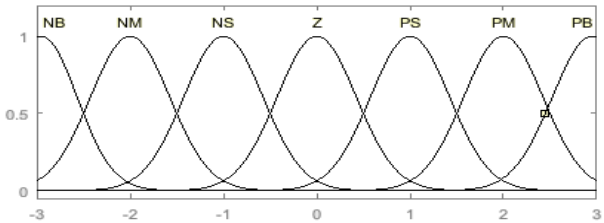

Fig.5*Membership function for error(e) and variation in error($\dot{e}$)*

e\$\dot{e}$	NB	NM	NS	Z	PS	PM	PB
NB	NB	NB	NB	NB	NM	NS	Z
NM	NB	NB	NB	NM	NS	Z	PS
NS	NB	NB	NM	NS	Z	PS	PM
Z	NB	NM	NS	Z	PS	PM	PB
PS	NM	NS	Z	PS	PM	PB	PB
PM	NS	Z	PS	PM	PB	PB	PB
PB	Z	PS	PM	PB	PB	PB	PB

TABLE 1. FUZZY CONTROLLER RULE SETS

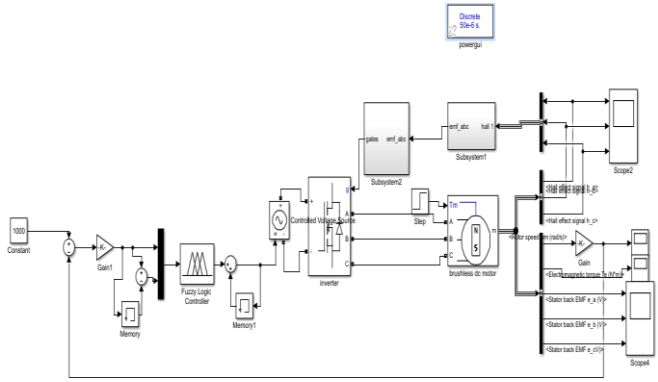

Fig.6 *Simulink model of speed control of BLDC motor using fuzzy controller*

3. Adaptive PID Fuzzy Controller

The block diagram of adaptive PID fuzzy controller has been shown in Fig.7.In this paper,Adaptive PID fuzzy controller is design using two inputs(e, $\dot{e}$) and three outputs. K_p, K_i and K_d are the outputs from the fuzzy logic controller .NB,NM,NA,Z,PS,PM and PB are the seven linquistic variable of inputs to the controller(e, $\dot{e}$)while Zero (Z), Very Low (VL), Very High(VH) ,Low(L), Medium(M),High(H), and Very Very High(VVH) are the seven linquistic output of the controller that is, K_p, K_i and K_d. Where K_p is define in the range of [0, 0.5], K_i is define in the range of [0,20] and K_d is define in range of [0,0.005]. Membership function of K_p, K_i and K_d is shown in figure 8, Fig. 9, Fig 10 respectively. And the fuzzy logic rules according to which desired control output can be achieve is given in TABLE 2 ,TABLE 3, TABLE 4. Here also Gaussian type membership function is used.

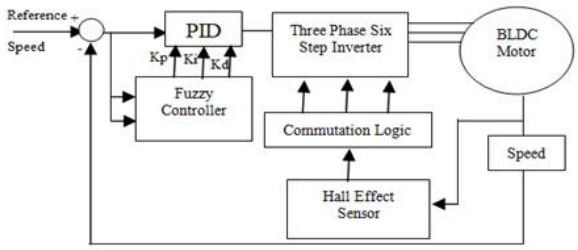

Fig. 7 Block diagram of Adaptive fuzzy PID controlled Brushless DC Motor

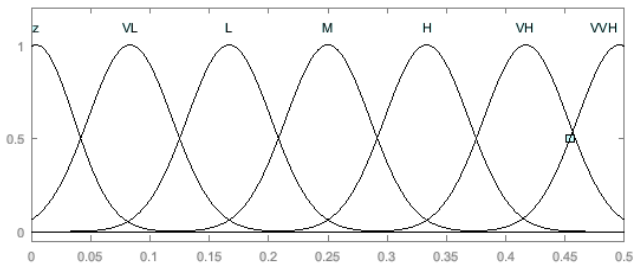

Fig.8 *Membership function for K_p*

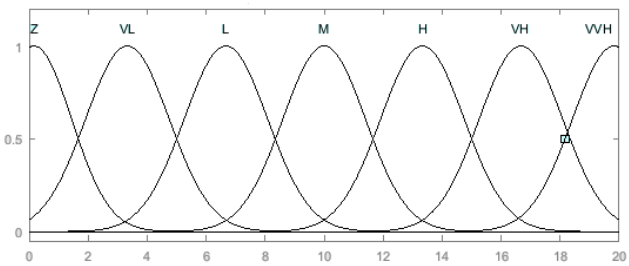

Fig.9 *Membership function for K_i*

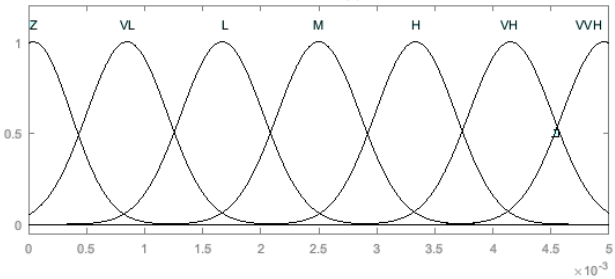

Fig.10 *Membership function for K_d*

e\ ė	NB	NM	NS	Z	PS	PM	PB
NB	VVH	VVH	VVH	VVH	VVH	VVH	VVH
NM	VH	H	H	H	H	H	VH
NS	M	M	VH	VH	VH	M	M
Z	Z	L	M	M	M	L	M
PS	M	M	VH	VH	VH	M	M
PM	VH	H	H	H	H	H	VH
PB	VVH	VVH	VVH	VVH	VVH	VVH	VVH

TABLE 2. FUZZY RULE SETS FOR K_p

e\ė	NB	NM	NS	Z	PS	PM	PB
NB	Z	Z	Z	Z	Z	Z	Z
NM	VL	Z	Z	Z	Z	Z	VL
NS	H	M	VL	Z	VL	M	H
Z	VVH	H	VH	Z	VH	H	VVH
PS	H	M	VL	Z	VL	M	H
PM	VL	Z	Z	Z	Z	Z	VL
PB	Z	Z	Z	Z	Z	Z	Z

TABLE 3. FUZZY RULE SETS FOR K_i

e\ė	NB	NM	NS	Z	PS	PM	PB
NB	Z	Z	Z	Z	Z	Z	Z
NM	M	L	VL	VL	VL	L	M
NS	VH	M	M	M	M	M	VH
Z	VVH	VVH	H	VH	H	VVH	VVH
PS	VH	M	M	M	M	M	VH
PM	M	L	VL	VL	VL	L	M
PB	Z	Z	Z	Z	Z	Z	Z

TABLE 4. FUZZY RULE SET FOR K_d

SIMULINK model of controlling of BLDCM using Adaptive PID fuzzy logic controller is given in Fig. 11

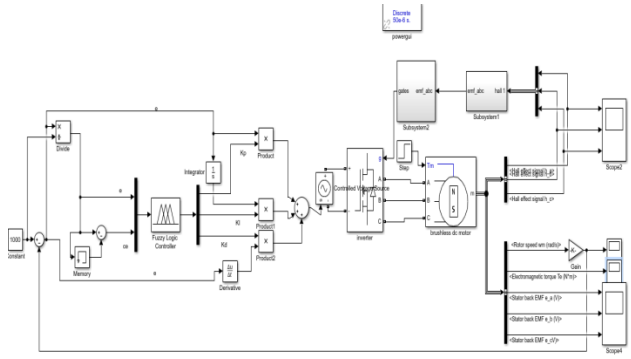

Fig. 11 SIMULINK model controlling of BLDC motor using adaptive PID fuzzy controller

IV. SIMULATION RESULTS

Specifications		
Parameters	Range	SI Units
L , R	0.0085, 2.875	Henry, Ohm
P	4	-
K_e	1.3	V/radian/second
K_T	1.4	Nm/A
J	0.08	Kgm^2
B	0.045	Nms/rad

TABLE 5. PARAMETERS USED

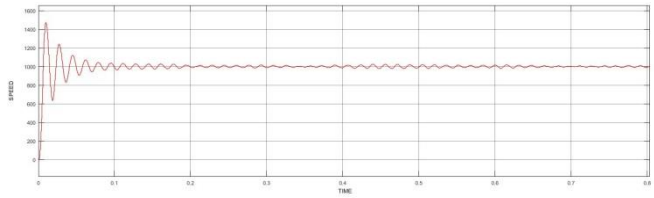

Fig.12 Speed response using fuzzy controller

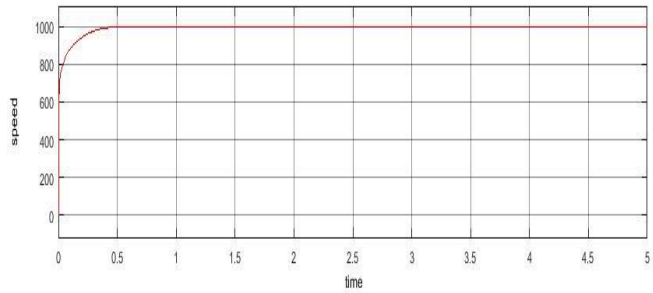

Fig.13 *Speed response using adaptive PID fuzzy controller without load torque*

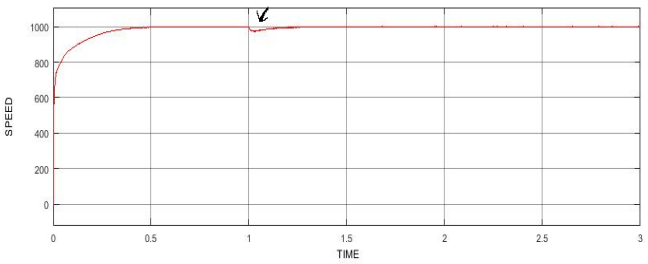

Fig.14 *Speed response using adaptive PID fuzzy controller with load torque*

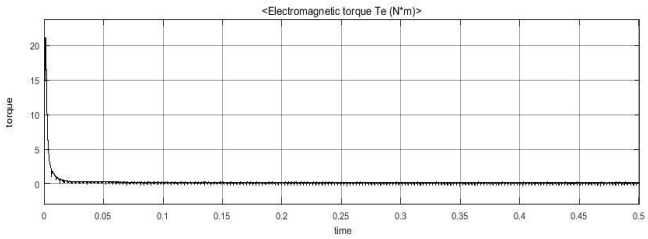

Fig.15 *Torque Characteristics*

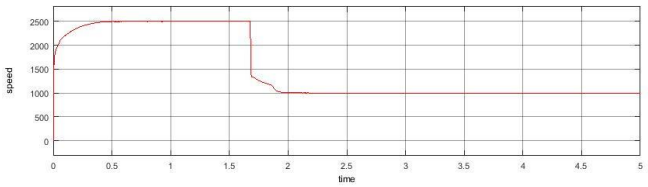

Fig 16 *Dynamically changing speed (2500rpm to 1000rpm) response by adaptive PID fuzzy controller*

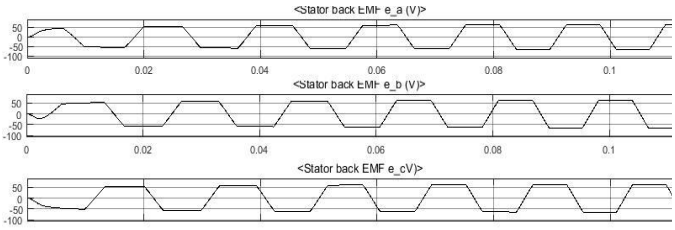

Fig. 17 *Trapezoidal shape back – Emf*

V. CONCLUSION

In this paper, Transfer function of a three phase BLDC motor has been derived which can be used for further analysis controlling or stability check of brushless DC motor. Also an adaptive fuzzy logic PID controller has been proposed which can perform adaptively irrespective of any dynamic change in the speed. Also during dynamic variation in speed of motor controller works very effectively as motor soon attend the new varied speed.

REFERENCES

[1]Ashwini M. Welekar, A.A Apte, "Development of brushless DC motor drive", IOSR Journal of Electrical and ElectronicsEngineering, e-ISSN: 2278-1676, p-ISSN: 2320-3331 PP 12-18, 2014

[2]M.Poovizhi, M.Senthil Kumaran, P.Ragul, L.Irene Priyadarshini, R.Logambal: " Investigation of mathematical modeling of brushless dc motor(BLDC) drives by using matlab-simulink.

[3]Shivani Mishra, S.S.Thakur, S.P.Phulambrikar: "Speed control of PMBLDC motor with the help of PI controller", SSRG International Journal of Electrical and Electronics E ngineering, vol. 2, issue 10, OCT 2015

[4]Lokesh Kumar Agrawal,Bhavesh Kumar Chauhan, G.K. Banerjee, 'Speed control of brushless DC motor using Fuzzy controller', International Journal of Pure and Applied Mathematics, Volume 119 No.15 2018.

[5]A. Tashakori, M. Ektesabi, N. Hosseinzadeh, "Modelling of BLDC motor with ideal back EMF for automotive application", Proceedings of the World Congress on Engineering, Vol II, 2011.

[6]C.C. Hwang, P.L. Li, C.T. Liu, C. Chen, "Design and analysis of a brushless DC motor for application of robotics", IET Electric Power Application, ISSN 1751-8660, Aug 2011.

[7]Xiaoyan Hung, Andrew Goodman, Chris GERADA, Youtong Fang, Qinfen Lu, "A single sided matrix converter drive for a brushless DC motor in aerospace application", IEEE Transaction On Industrial Electronics,vol.59,no.9,sep 2012

[8] Mohamed Z. YOUSSEF, "Design and performance of a cost-effective BLDC drive for water pump application", IEEE Transaction On Industrial Electronics, vol 62, no. 5 , may 2015.

[9]P.Hari Krishnan, M.Arjun 'Control of BLDC motor based on Adaptive fuzzy logic PID controller.IEEE

[10]Iraj Faraji Davoudkhani, Mohsen Akbari 'Adaptive speed control of brushless DC motor on interval Type -2 fuzzy logic,24thIranian conference on Electrical Engineering, IEEE,2016

[11] Chang- Liang Xia, "Permanent magnet brushless DC motor drives and controls" , John Wiley and Sons pte.Ltd,2012.

[12]Sergio Andres Reyes Sierra, Jose Luis Vazquez Gonzalez: "Switching Techniques for Brushless DC Motors". IEEE,2013